WHAT3WORDS: ///TUCK.LABS.CYCLE

LEGGETT BUILDING

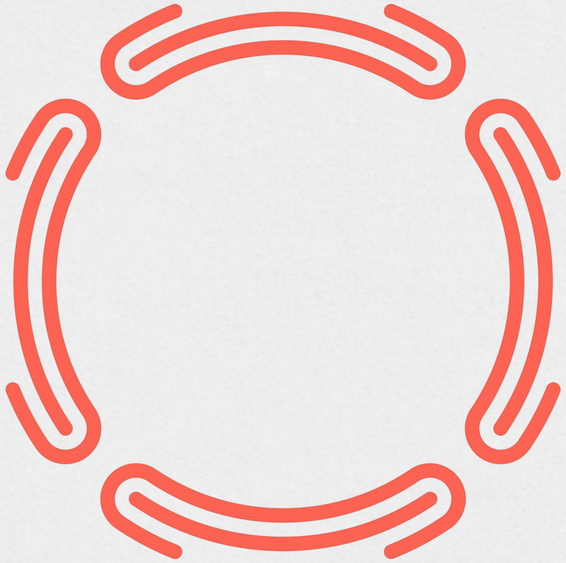

BUILD TO SUIT OPPORTUNITY
78,811 SQ FT / 7,321.8 SQ M CONSENTED
POTENTIAL FOR UP TO 120,000 SQ FT / 11,148.4 SQ M

THE OXFORD SCIENCE PARK



CULTIVATING EXCELLENCE

Leggett Building is a new build-to-suit opportunity at The Oxford Science Park, one of the UK's most established and successful destinations for science and technology.

With typical floorplates of 28,000 sq ft, this high specification building offers purpose-built space with views across the Park, designed to help future occupiers perform, grow and innovate.

78,811 sq ft consented.
Potential to scale to 120,000 sq ft.



A GLOBAL CENTRE FOR INNOVATION

The Oxford Science Park is home to a dynamic community of pioneering organisations, from early-stage to established multinationals.

Its occupiers operate across life sciences, AI, energy, agritech, and beyond, creating a collaborative environment where ambitious businesses can grow and ideas can flourish.

Many companies at the Park have secured significant investment and achieved strong growth as they develop technologies shaping the future of science and industry.

DESTINATION OXFORD

#1
home to the world's highest ranked University

3K
high-tech businesses

12K
employed in R&D intensive companies

30K
employed in high-tech firms

#1
highest number of UK spinouts

16
research institutes and hospitals within Oxford city


Ellison Institute of Technology
Magdalen Centre Bellhouse Building
Littlemore Station
Magdalen Centre Whitehead Building
Iversen Building
Hayakawa Building
LEGGETT BUILDING
Magdalen Centre Sherrington Building
Northbrook House
Edmund Cartwright House
Florey House
Medawar Centre 1
Medawar Centre 2
John Eccles House
Plot 27

A DYNAMIC SCIENCE & TECHNOLOGY COMMUNITY











































































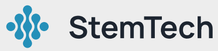





COLLECTIVE KNOWLEDGE

Home to nearly 100 pioneering organisations, The Oxford Science Park is a global hub where breakthrough ideas and innovative companies grow and succeed.

Innovation is powered by connection. Our dynamic community benefits from a vibrant programme of networking events, professional development opportunities and wellbeing activities.

From exchanging ideas at industry gatherings to connecting over fitness classes, the Park creates an environment where collaboration comes naturally and new partnerships can flourish.





PROVEN

Since 1991, close to 550,000 sq ft (NIA) has been delivered on The Oxford Science Park.

Recent examples are:



SCHRÖDINGER BUILDING
77,192 sq ft

State-of-the art, multi-let office and laboratory building over four storeys.



IVERSEN BUILDING
86,547 sq ft

The Iversen Building provides flexible, efficient, high specification laboratory and office space. 100% let shortly after completion.

THE DAUBENY PROJECT
380,309 sq ft

Speculative lab-ready space delivered to shell and core across three buildings. The buildings were sold to EIT in September 2025.



DELIVERY

ON YOUR BEAUTIFUL DOORSTEP

Set within beautifully landscaped grounds, the Park offers a strong mix of on-site amenities, including a diverse choice of places to eat and unwind, from relaxed table-service dining and freshly prepared takeaway options to coffee enjoyed on the terrace.

A nursery and multi-sports pitch further enhance an environment designed to support both work and wellbeing.









Businesses are supported by a range of meeting rooms and conference facilities, alongside flexible collaborative workspaces designed for productive conversations, teamwork and new ideas.





ELLISON INSTITUTE OF TECHNOLOGY



An ambitious new campus accelerating scientific discovery and innovation for global impact.

The Ellison Institute of Technology is developing a 2m sq ft campus at The Oxford Science Park, bringing together advanced research, clinical facilities, and education and event spaces.

Through collaboration with companies and leading Oxford scientists, the Institute aims to deliver scaled solutions to humanity's important problems, with a focus on four endeavours: Health, Medical Science & Generative Biology, Food Security & Sustainable Agriculture, Climate Change & Managing Atmospheric CO2, and Artificial Intelligence & Robotics.

THE PARK

1 **Leggett Building**
2 Magdalen Centre – Sherrington Building
3 Magdalen Centre – Whitehead Building
4 Magdalen Centre – Bellhouse Building
5 Northbrook House
6 Edmund Cartwright House
7 Florey House
8 John Eccles House
9 Medawar Centre 1
10 Medawar Centre 2
11 Iversen Building
12 Plot 27 (future development)

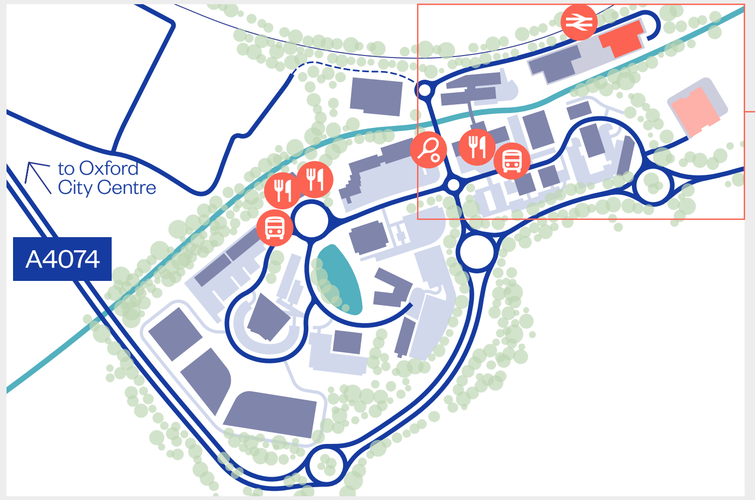

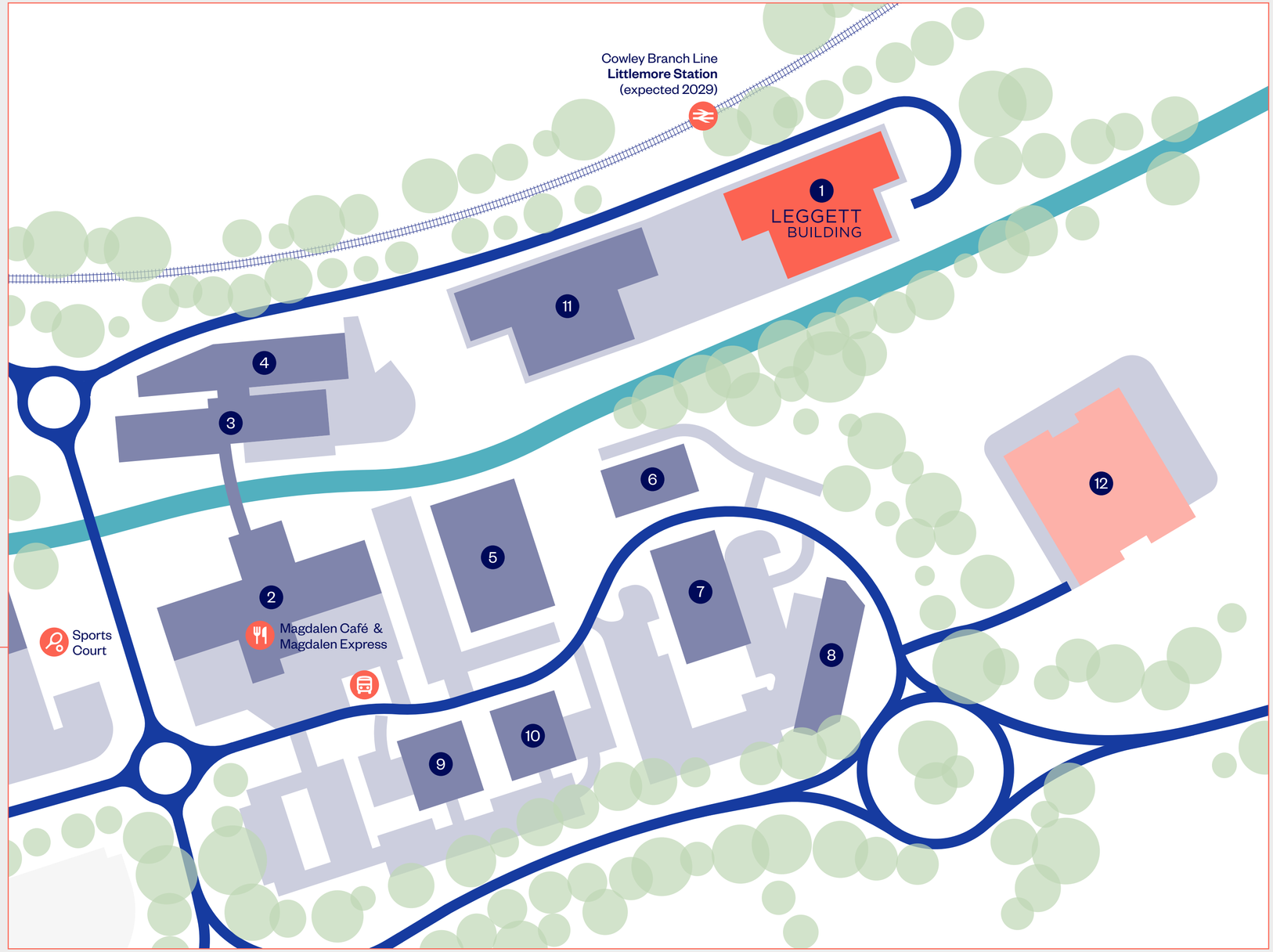

FAST TRACK

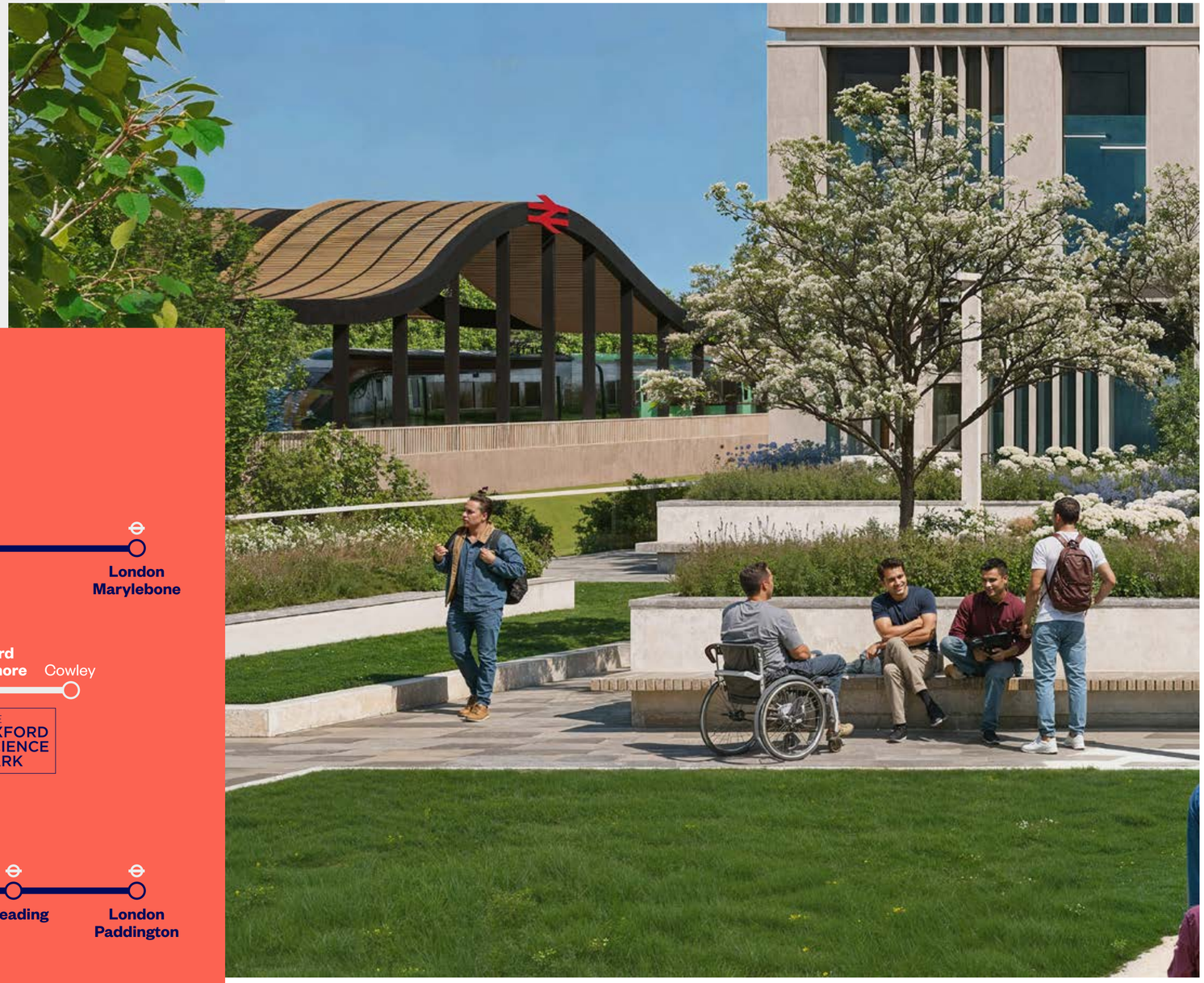

A new station* adjacent to the Leggett Building will connect The Oxford Science Park to central Oxford and the wider UK rail network.

With direct trains to London Marylebone every 30 minutes, and fast connections by road, rail and air, the Park offers outstanding connectivity.

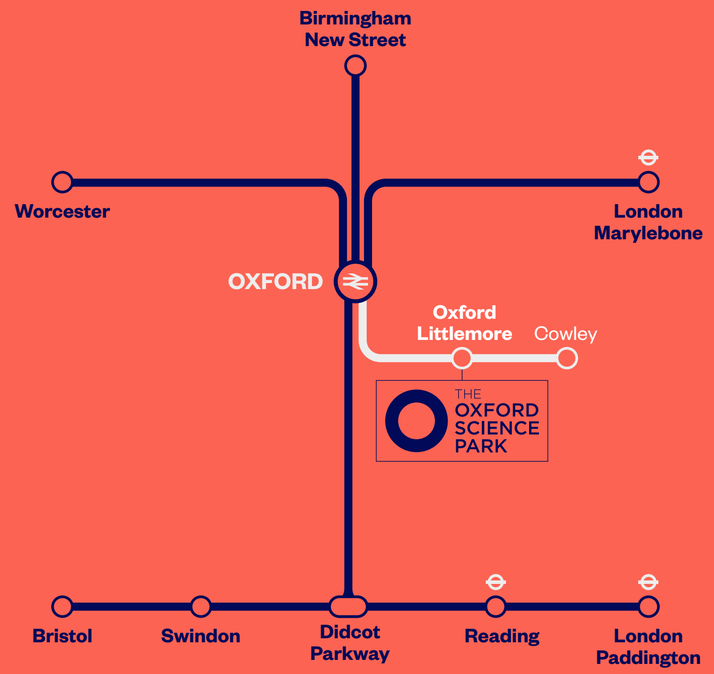

To central Oxford

7 mins

Trains to London every

30 mins

* Expected to open in 2029 with the reopening of the Cowley Branch Line.

Travel by bus	
Redbridge Park & Ride	13 mins
Oxford City Centre	21 mins
Oxford Train Station	27 mins

Travel by car	
University of Oxford	10 mins
John Radcliffe Hospital	12 mins
Oxford Train Station	15 mins
London Heathrow Airport	50 mins
London	1hr 32 mins
Cambridge	1hr 55 mins

Travel by train (from Oxford Station)	
Bicester	16 mins
Banbury	18 mins
Didcot Parkway	18 mins
Reading (Elizabeth Line)	24mins
London Paddington (Elizabeth Line)	52 mins
London Heathrow	1hr 17mins
London Marylebone	1hr 20mins

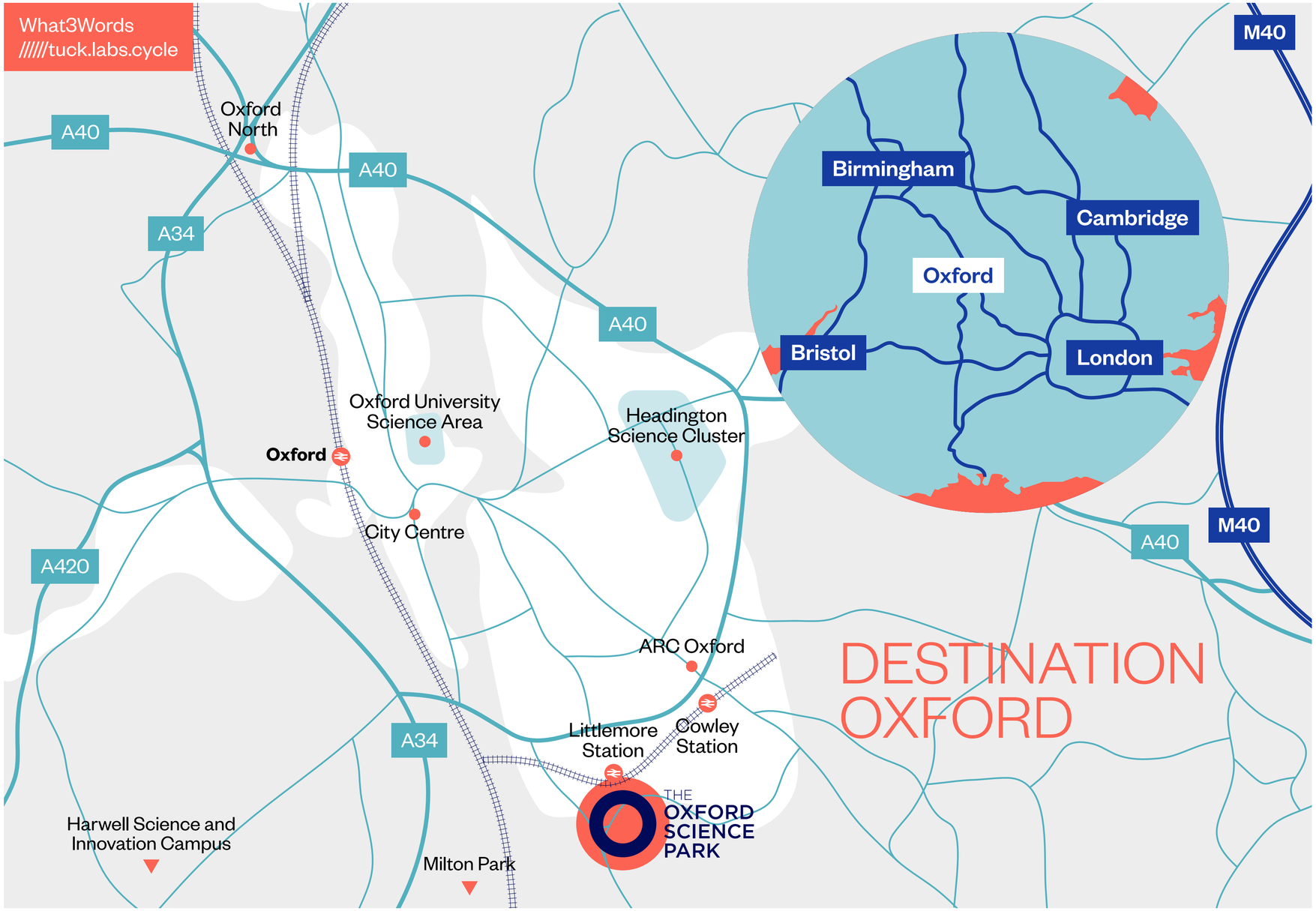


LEGGETT
BUILDING


LEGGETT
BUILDING

LAB READY FUTURE PROOFED

Leggett Building will provide bespoke, lab ready accommodation available over the three upper floors, with extensive parking, loading and laboratory amenity at ground and first floor levels.

As a build-to-suit opportunity, The Oxford Science Park will work with you to deliver the highest quality, fit-for-purpose lab building to meet your requirements.

BUILDING SPECIFICATION

- Building design supports a 70:30 CL2 lab to office ratio on floors 2 and 3 and a 50:50 ratio on floor 4
- 6 air changes per hour to labs
- 4.35m slab to slab height
- 1,600 mm square planning grid for optimum laboratory design
- Riser capability for 8 ducted fume hoods per floor
- 2MVA LV power supply
- 2 × passenger lifts plus 1 × goods lift
- Targeting EPC “A” & BREEAM “Excellent”
- Plant room with pre-installed air handling plant
- Tenant ductwork pre-installed for main services
- Centralised lab cold water supply available to all areas
- Dedicated mechanical riser providing low temperature hot water, chilled water, and domestic water
- Capped drainage points in risers and column bases at each occupied floor level
- Centralised lab gas and refuse stores
- Future essential services back up generation
- Power supply to tenant distribution board at floor level



YOUR SPACE

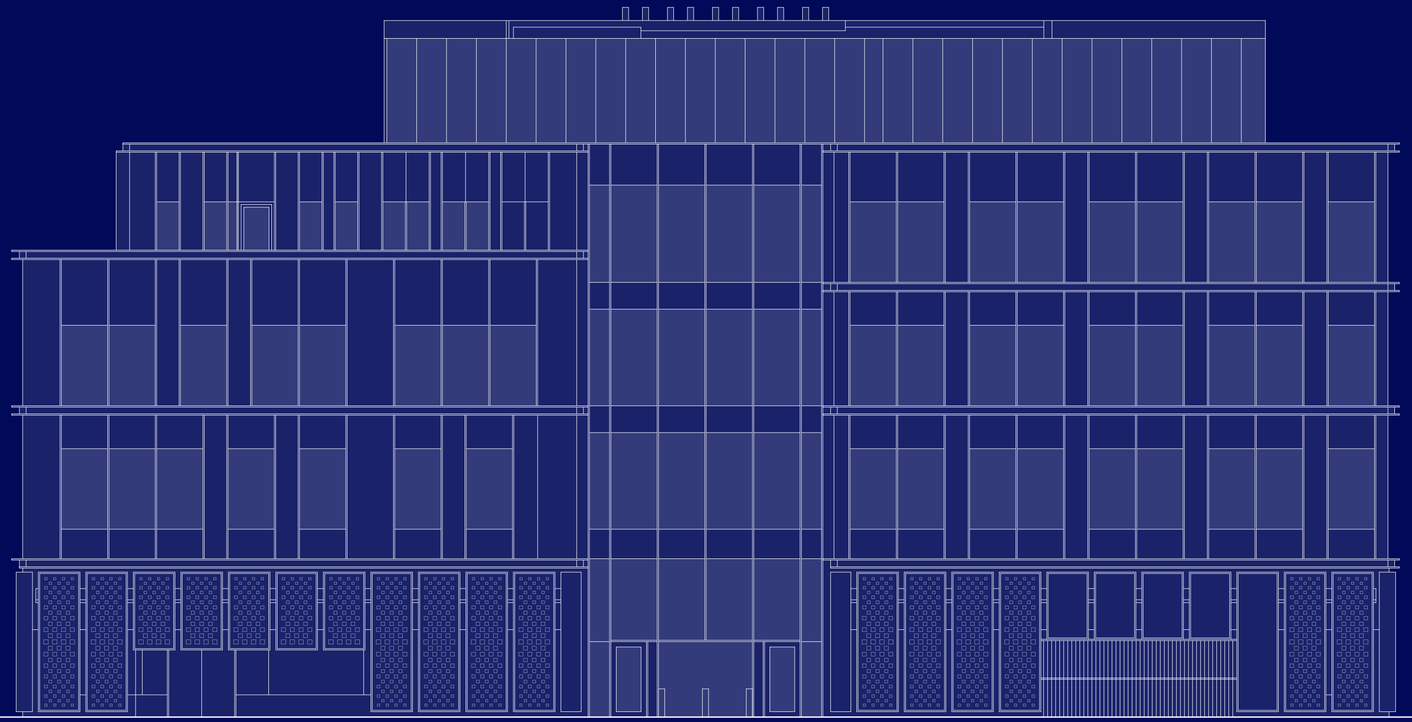

Plant

4	21,678 SQ FT / 2,014.0 SQ M
3	29,217 SQ FT / 2,714.3 SQ M
2	27,916 SQ FT / 2,593.5 SQ M Reception
1	142 car parking spaces
0	106 car parking spaces / 110 secure cycle spaces Reception

*This is a consented scheme but potential changes can be considered.

Car Parking Ratio of 1:359 sq ft

LEVEL ZERO

Car parking spaces	106
Secure cycle spaces	110

Car Parking Ratio of 1:359 sq ft

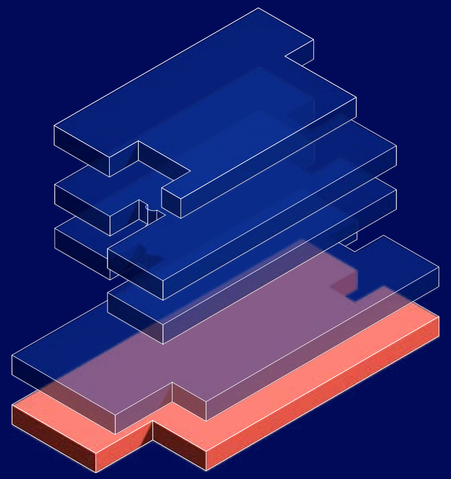

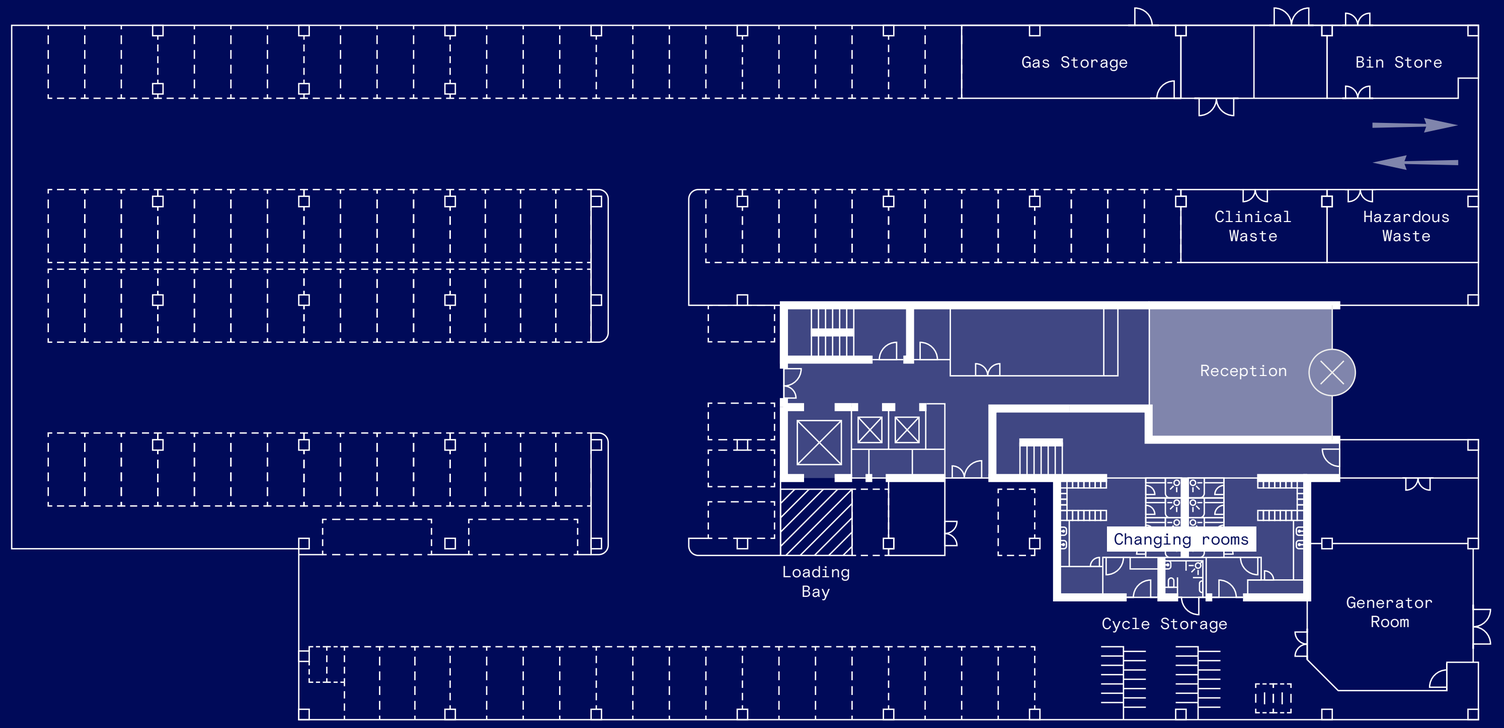

Plan not to scale. For indicative purposes only.

LEVEL ONE

Car parking spaces	142

Car Parking Ratio of 1:359 sq ft

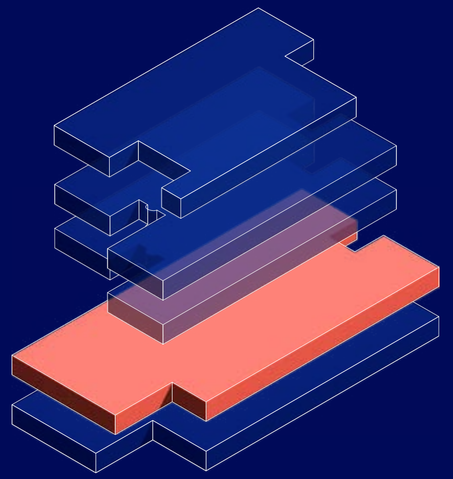

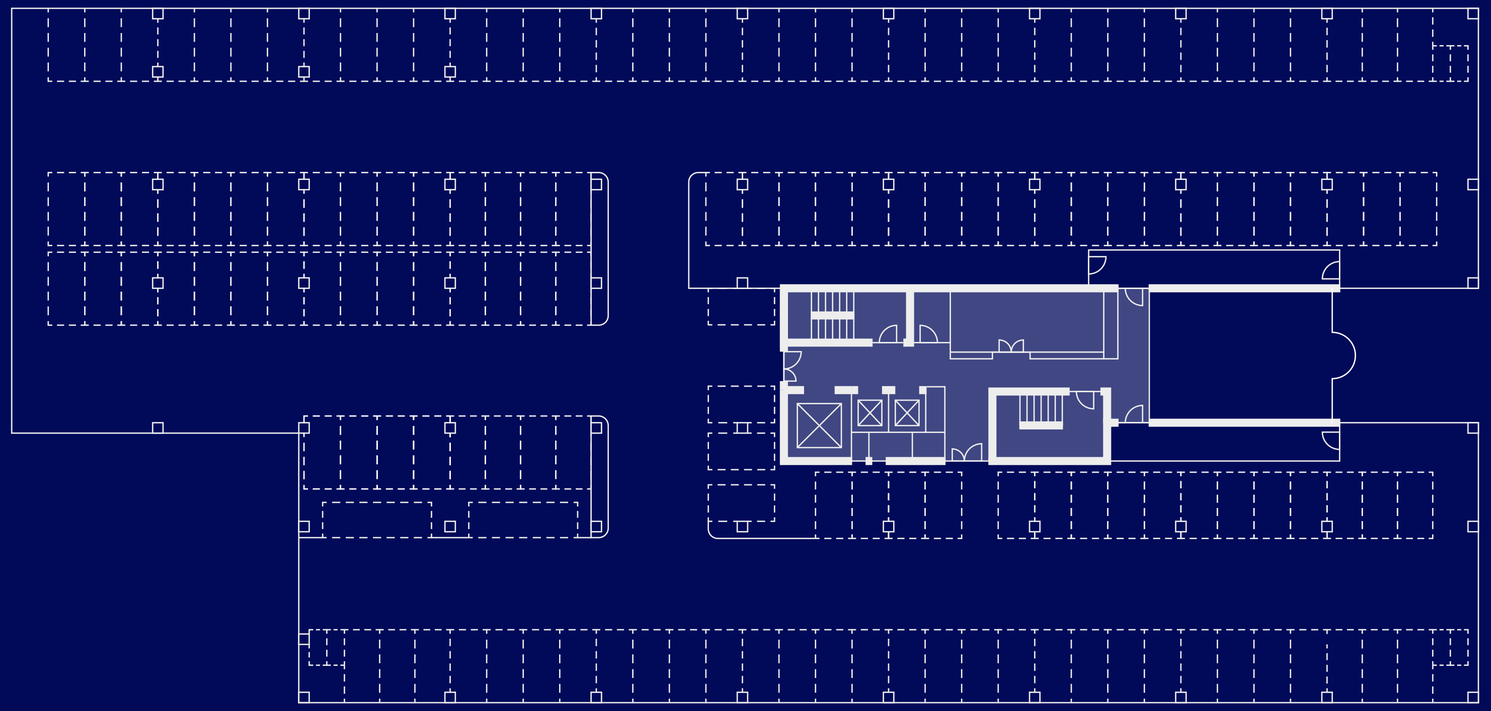

Plan not to scale. For indicative purposes only.

LEVEL TWO

	SQ FT	SQ M
Lab space	**27,916**	**2,593.5**

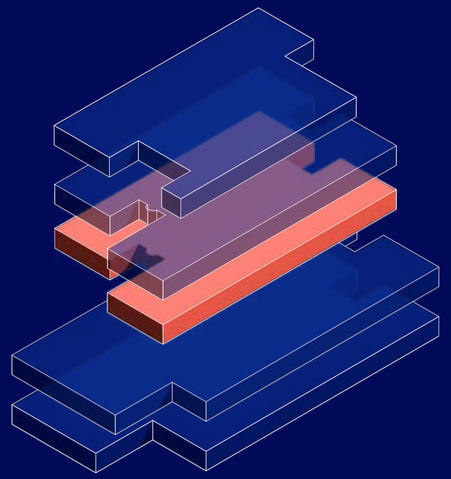

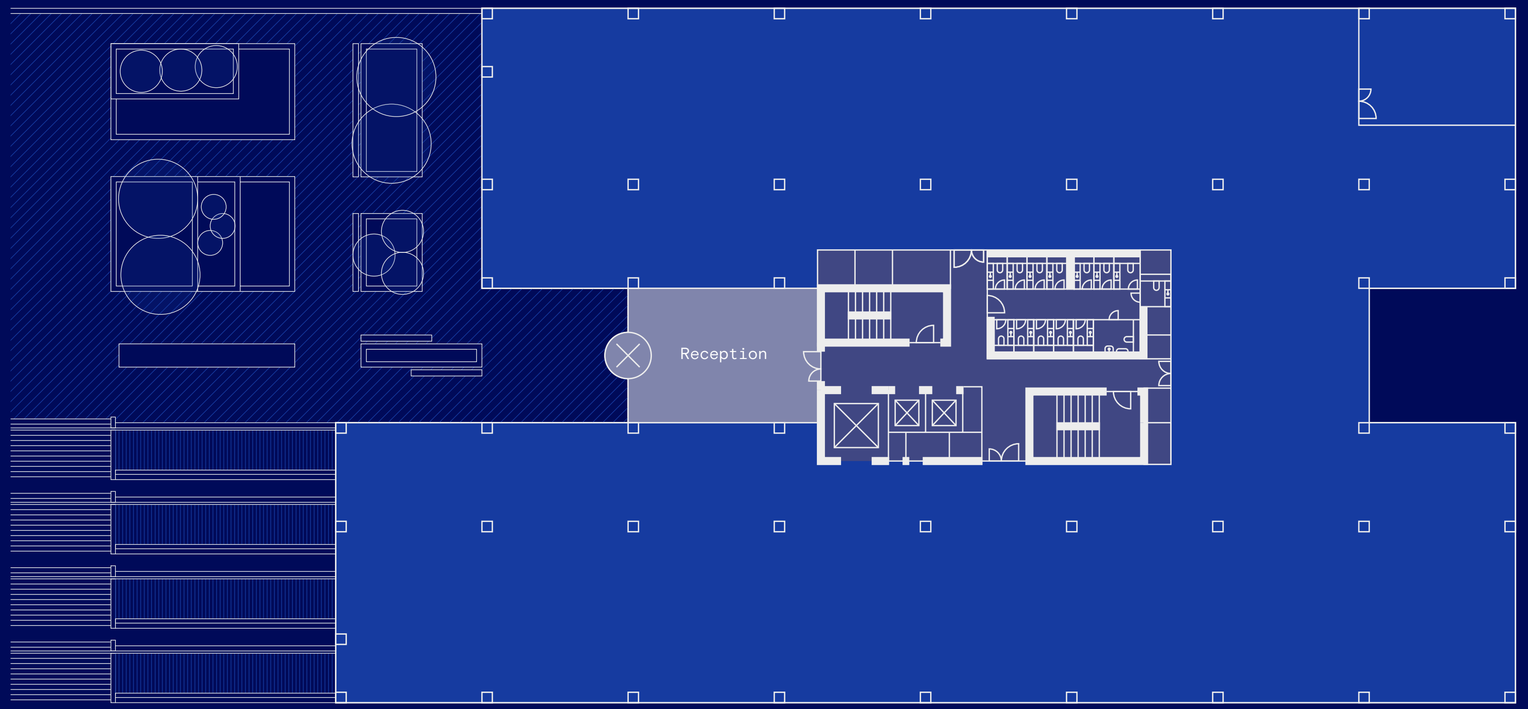

Plan not to scale. For indicative purposes only.

LEVEL THREE

	SQ FT	SQ M
Lab space	**29,217**	**2,714.3**

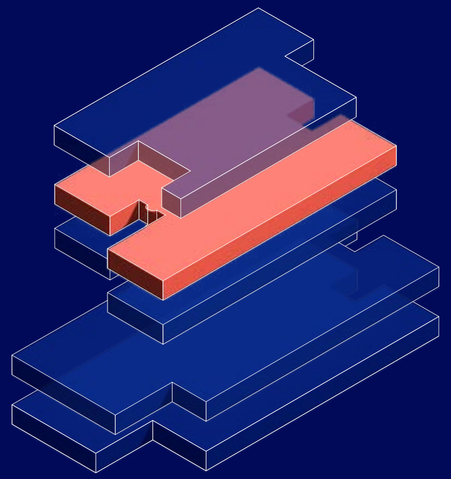

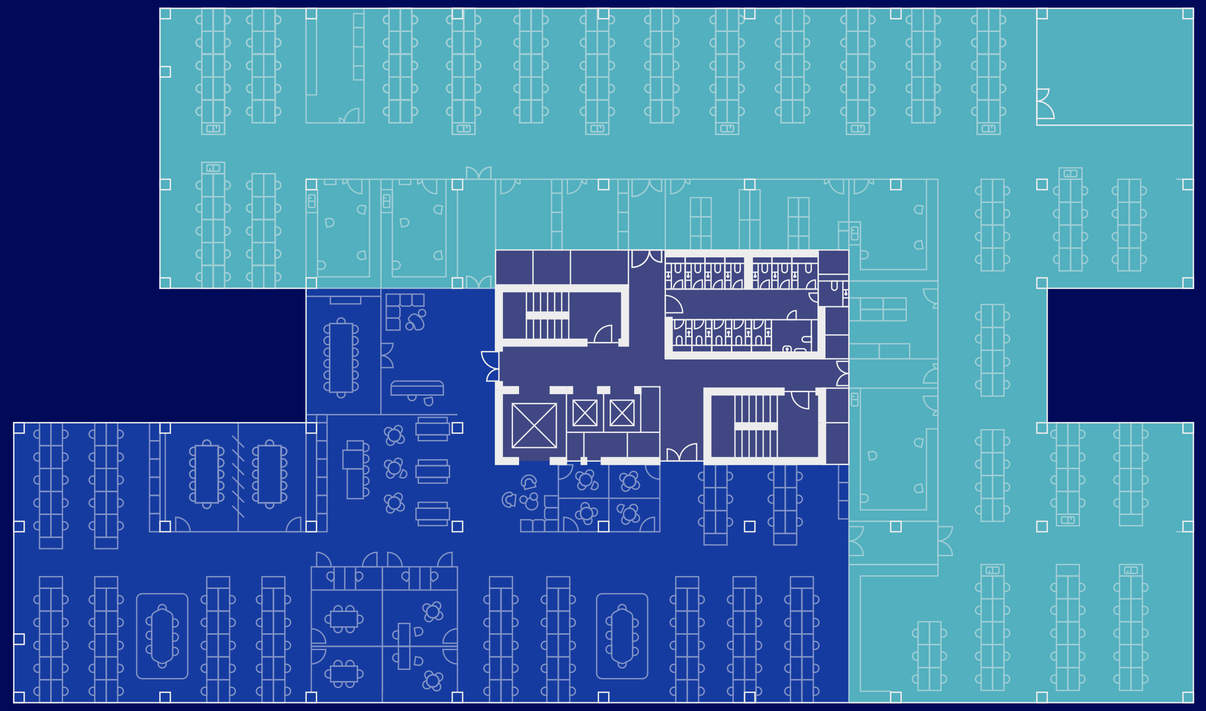

Wet Lab
test fitout

120
workstations

230
benches

Plan not to scale. For indicative purposes only.

LEVEL THREE

	SQ FT	SQ M
Lab space	**29,217**	**2,714.3**

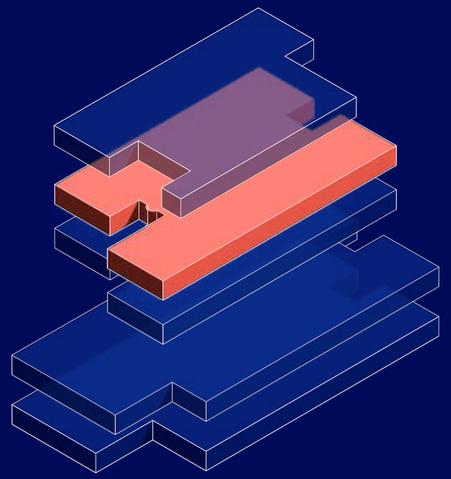

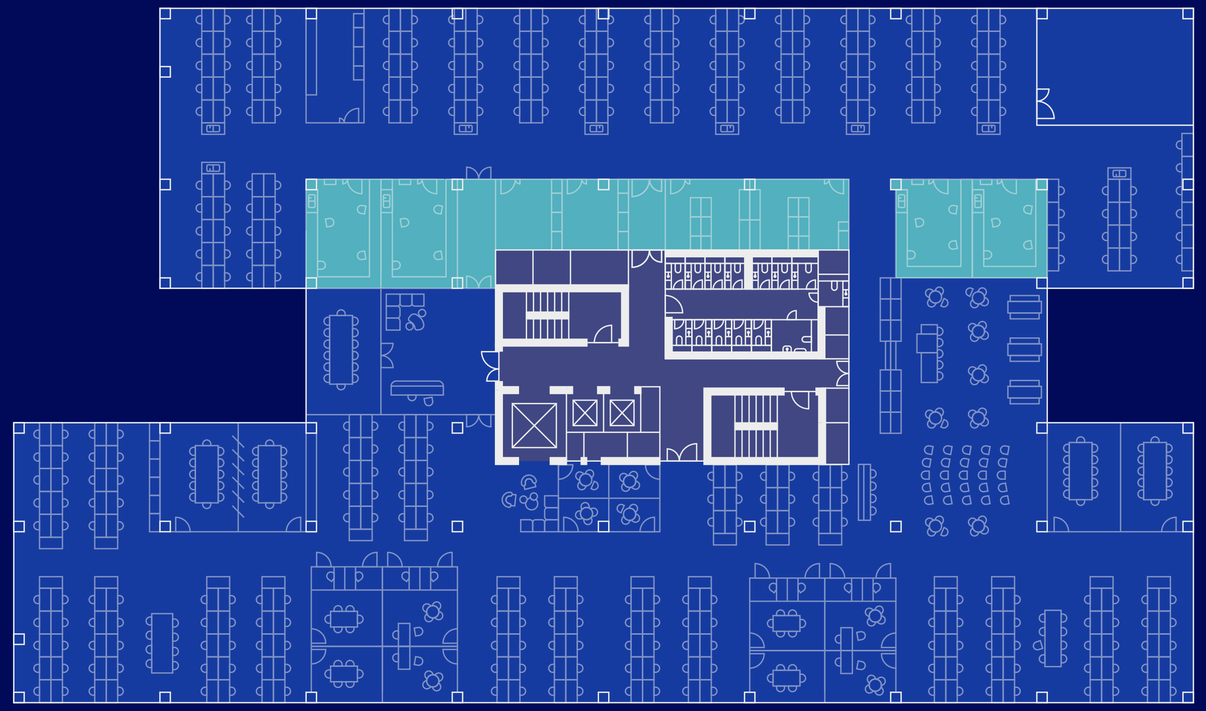

Dry Lab
test fitout

232
workstations

40
benches

Plan not to scale. For indicative purposes only.

LEVEL FOUR

	SQ FT	SQ M
Lab space	**21,678**	**2,014.0**

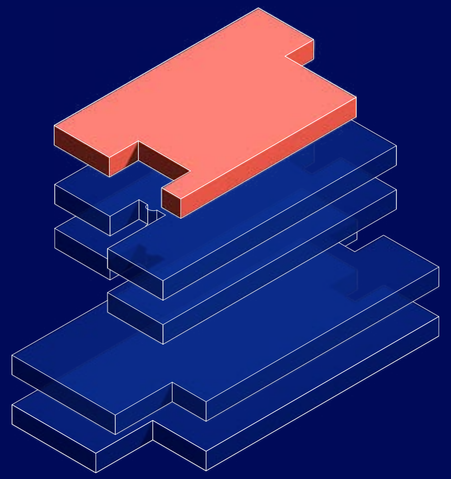

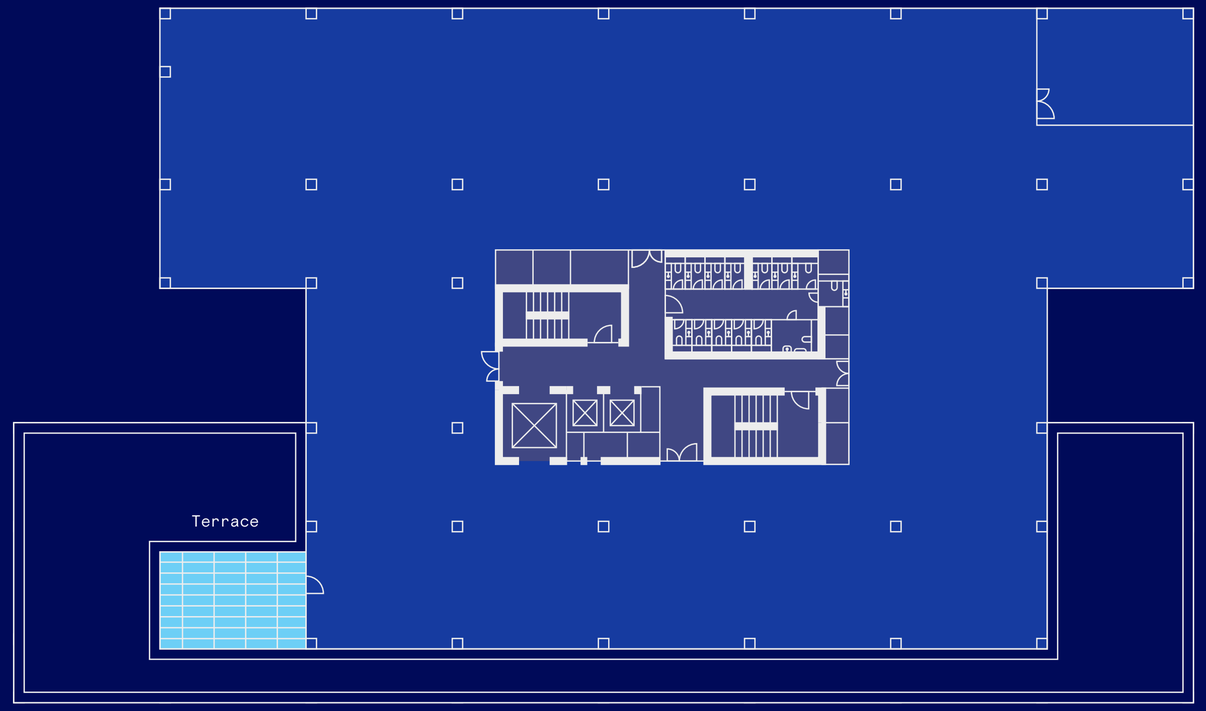

Plan not to scale. For indicative purposes only.



BUILD

Consented scheme – 78,811 sq ft

Months	1	2	3	4	5	6	7	8	9	10	11	12	13	14	15	16	17	18	19	20	21	22	23	24	25	26	27	28	29	30
Lead in																														
Procurement																														
Build																														

Revised scheme –120,000 sq ft

Months	1	2	3	4	5	6	7	8	9	10	11	12	13	14	15	16	17	18	19	20	21	22	23	24	25	26	27	28	29	30
Lead in																														
Procurement																														
Build																														

TO SUIT

LEGGETT BUILDING

OXFORDSP.COM

+44 (0)1865 784 000

info@oxfordsp.com

Further information

CUSHMAN & WAKEFIELD

Rory MacGregor
+44 (0) 7710 302 455
rory.macgregor@cushwake.com

Harry Blanshard
+44 (0) 7385 950 543
harry.blanshard@cushwake.com

DTRE

Guy Nicholas
+ 44 (0) 7350 436 013
guy.nicholas@dtre.com

Matt Smith
+44 (0) 7810 191 570
matt.smith@dtre.com

THE OXFORD SCIENCE PARK

DTRE and Cushman & Wakefield have made every attempt to ensure that the particulars and other information provided are as accurate as possible and are not intended to amount to advice on which you should rely as being factually accurate. Any measurements and distances given are approximate only. Although we make reasonable efforts to update our information, neither DTRE, Cushman Wakefield nor anyone in its employment or acting on its behalf makes any representations warranties or guarantees, whether express or implied, in relation to the property, or that the content in these particulars is accurate, complete or up to date.

Design by jamesjames.design / Reference: 2601025 / Published: July 2026.