West Coast Estates
Development & Investment

Inverness

North Kessock

IV1 3JB (what3words ///player.goal.earplugs)

PLANNING PERMISSION GRANTED

Exciting new roadside development site to include Fastned EV charging station

Fastned

Strategic location directly off the A9

Accessible from both directions of the dual carriageway

Traffic counts

A9 35,000 daily

West Coast Estates

Location

Inverness is the commercial and administrative centre for the Scottish Highlands and Islands Region.

The city benefits from excellent communication links by rail, air and road. The city has access from the south by way of the A9 which links to Perth and the Scottish motorway network.

The city has an extensive catchment population of approximately 476,500 people. The city has also developed into a major tourist and retail centre with an estimated 1.6 million tourists per year.

To the north is Invergordon, which is predicted to welcome 230,000 cruise ship passengers in 2024. This, along with the Port of Inverness are part of the new Green Freeport which will lead to the creation of more than 10,000 jobs and attract over £3billion of fresh investment.

The site is located to the north of the city in North Kessock just off the A9 with a vehicle count in this area of around 35,000 per day.

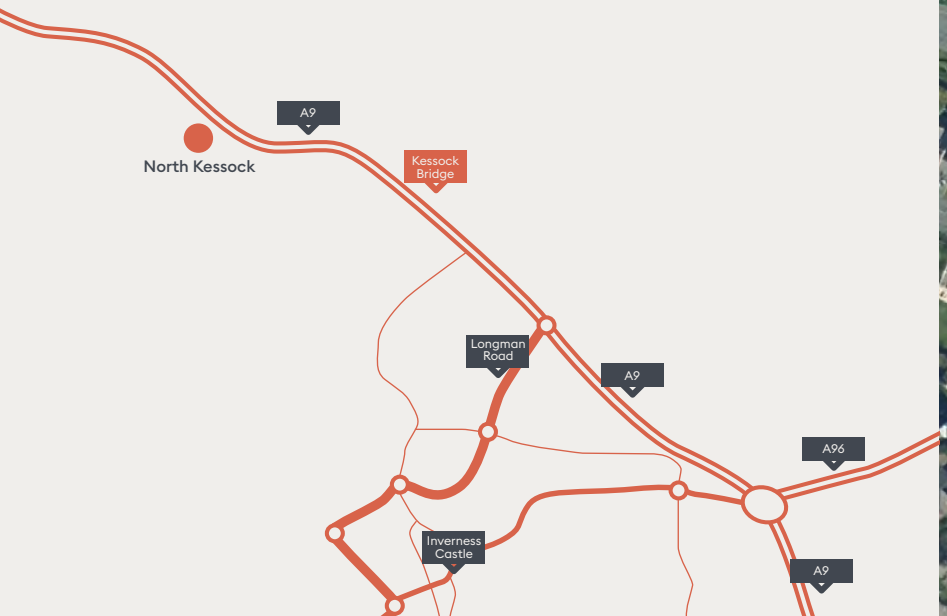

West Coast Estates

Exciting new development
North Kessock

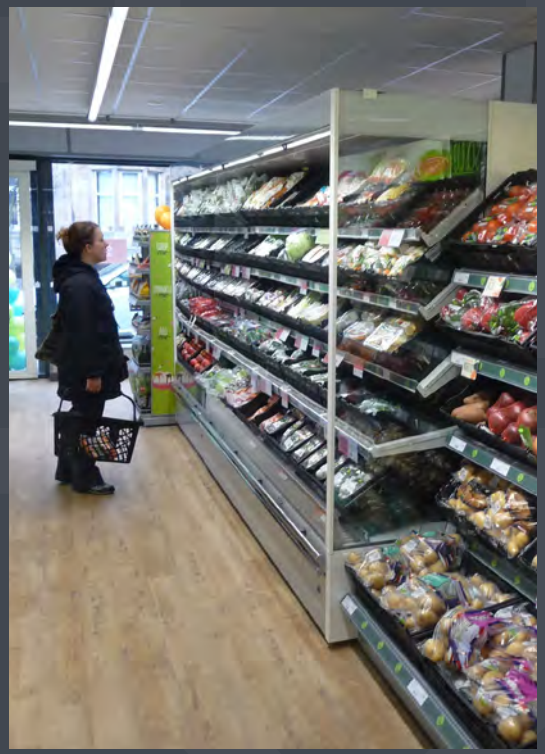

Description

The proposal is for a new roadside development. The site has excellent access and egress from both directions of the A9.

The scheme will include a Fastned Ultra Rapid (400kW+) EV charging station. Fastned is a European electric vehicle (EV) charging company with over 300 stations across Europe. They form part of the Spark Alliance, a collaboration to unite and create Europe's largest and most reliable public charging network.

The scheme has planning permission to provide the following:

EV Charging	12 bays	Fastned
Class 3 Restaurant	400 sq ft – 2798 sq ft	**Available**
Retail	1076 sq ft – 4350 sq ft	**Available**

The site is located to the north of the city, just off the A9 with a vehicle count in this area of around 35,000 per day.

West Coast Estates

Exciting new development
North Kessock

Layout Plan

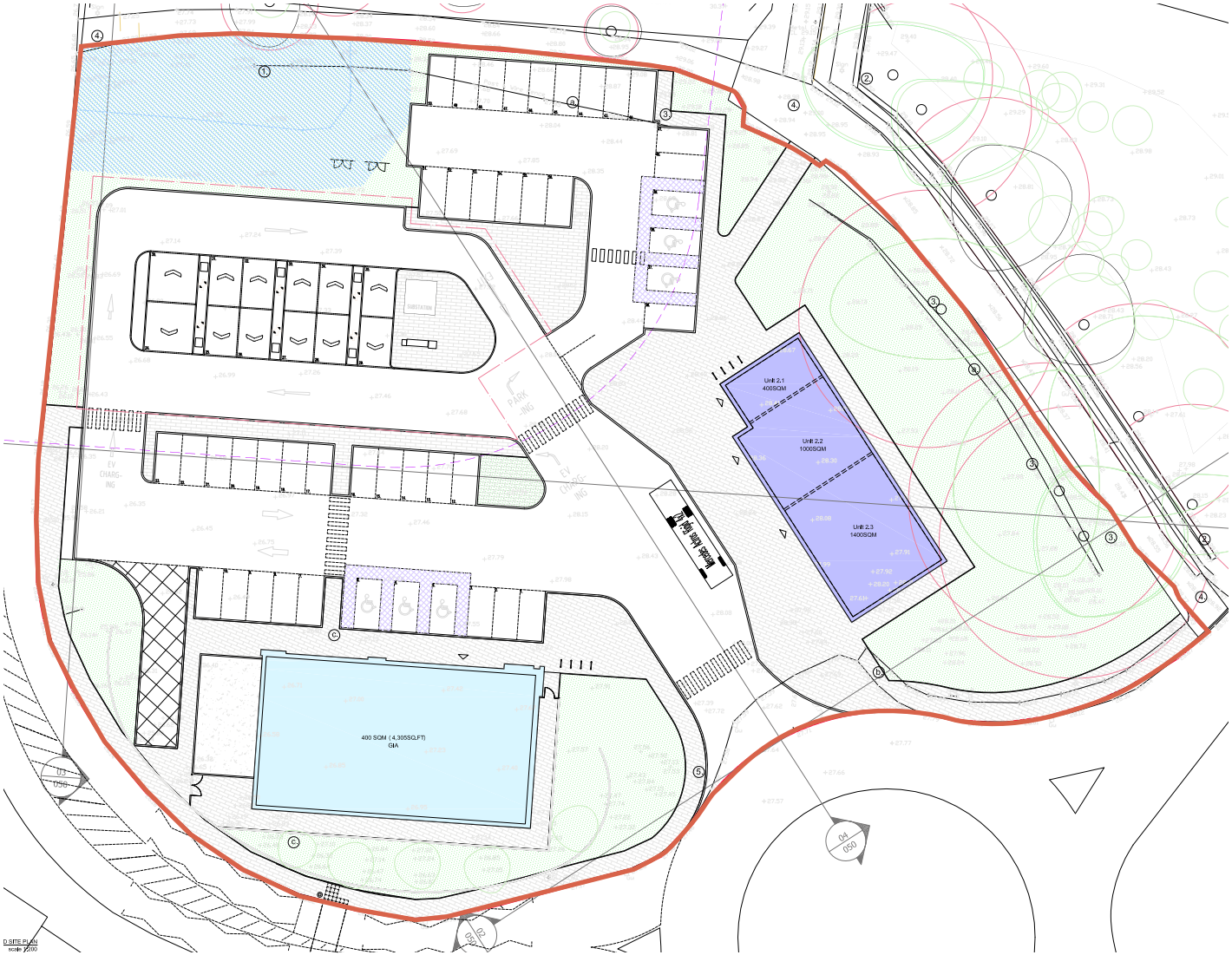

Subdivision Options

2 - 3 Unit Option

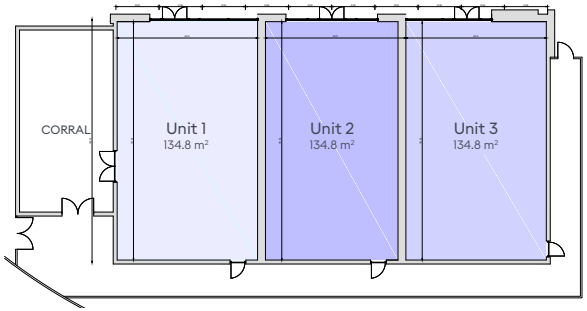

1 - 4 Unit Option

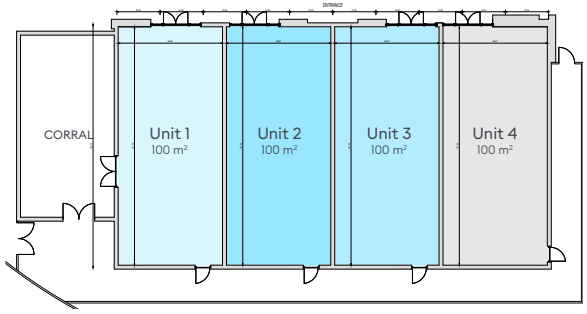

West Coast Estates

Lease/Rent

The units/sites are being offered on the basis of a new FRI lease. Rent on application.

Rates

Any units have yet to be separately assessed for the purposes of rates.

Enquiries

All enquiries to be made through the letting agents.

SBM COMMERCIAL property consultants

Susan Matthews

M: 07887 804524
E: smatthews@sbmcom.co.uk

GRAHAM SIBBALD

Kenny McKenzie

M: 07803 896963
E: kenny.mckenzie@g-s.co.uk

MISREPRESENTATION ACT 1967 and PROPERTY MISDESCRIPTIONS ACT 1991 SBM Commercial Ltd, their clients, give notice that: (i) These particulars do not form part of any offer or contract and must not be relied upon as statements or representations of fact. (ii) No person in the employment of the agent(s) has any authority to make or give any representation or warranty whatever in relation to this property. (iii) Floor areas, measurements or distances given are approximate. Unless otherwise stated, any rents, or outgoings quoted are exclusive of VAT. (iv) Any descriptions given of the property cannot be taken to imply, it is in good repair, has all necessary consents, is free of contamination, or that the services and facilities are in working order. Interested parties are advised to carry out their own investigations as required. SEPTEMBER 2025.

Exciting new development
North Kessock

West Coast Estates
Development & Investment

We are well-established property developers and investors.

Working closely with occupiers, surveyors, residents and public bodies we've been helping create great commercial and residential spaces in Scotland since 1991. We're proactive, hands-on and open to pursing new opportunities that have great potential and add value to the local communities.

westcoastestates.co.uk